PART 36 NONDISCRIMINATION ON THE BASIS OF DISABILITY IN PUBLIC ACCOMMODATIONS AND COMMERCIAL FACILITIES

(AS AMENDED BY THE FINAL RULE PUBLISHED ON SEPTEMBER 15, 2010)

ALSO KNOW AS TITLE III OF THE AMERICANS WITH DISABILITIES ACT, THIS LAW INCLUDES PROVISIONS WHICH REGULATE PUBLIC ACCOMMODATIONS AND COMMERCIAL FACILITIES.

THE REQUIREMENTS IN THE BUILDING CODES ARE SIMILAR TO THE REQUIREMENTS OF THIS LAW. AN ACCESSIBLE PATH OF TRAVEL MUST BE PROVIDED FROM ACCESSIBLE PARKING SPACES TO THE PRIMARY FUNCTION. IN ALTERATIONS OF EXISTING BUILDINGS, THE COST TO PROVIDE AN ACCESSIBLE PATH IS LIMITED TO 20% OF THE COST OF THE ALTERATIONS. THIS CORRESPONDS TO EXCEPTION 1 OF SECTION 605.1 OF THE IEBC. AN ACCESSIBLE PATH OF TRAVEL MUST BE PROVIDED AS BEST POSSIBLE WITHIN THE 20% COST FIGURE.

TITLE III OF THE AMERICANS WITH DISABILITIES ACT

SUBPART D - NEW CONSTRUCTION AND ALTERATIONS

SECTION 36.402 - ALTERATIONS

(A) *GENERAL*.

(1) ANY ALTERATION TO A PLACE OF PUBLIC ACCOMMODATION OR A COMMERCIAL FACILITY, AFTER JANUARY 26, 1992, SHALL BE MADE SO AS TO ENSURE THAT, TO THE MAXIMUM EXTENT FEASIBLE, THE ALTERED PORTIONS OF THE FACILITY ARE READILY ACCESSIBLE TO AND USABLE BY INDIVIDUALS WITH DISABILITIES, INCLUDING INDIVIDUALS WHO USE WHEELCHAIRS.

(2) AN ALTERATION IS DEEMED TO BE UNDERTAKEN AFTER JANUARY 26, 1992, IF THE PHYSICAL ALTERATION OF THE PROPERTY BEGINS AFTER THAT DATE.

(B) *ALTERATION*. FOR THE PURPOSES OF THIS PART, AN ALTERATION IS A CHANGE TO A PLACE OF PUBLIC ACCOMMODATION OR A COMMERCIAL FACILITY THAT AFFECTS OR COULD AFFECT THE USABILITY OF THE BUILDING OR FACILITY OR ANY PART THEREOF.

(1) ALTERATIONS INCLUDE, BUT ARE NOT LIMITED TO, REMODELING, RENOVATION, REHABILITATION, RECONSTRUCTION, HISTORIC RESTORATION, CHANGES OR REARRANGEMENT IN STRUCTURAL PARTS OR ELEMENTS, AND CHANGES OR REARRANGEMENT IN THE PLAN CONFIGURATION OF WALLS AND FULL-HEIGHT PARTITIONS. NORMAL MAINTENANCE, RE-ROOFING, PAINTING OR WALLPAPERING, ASBESTOS REMOVAL, OR CHANGES TO MECHANICAL AND ELECTRICAL SYSTEMS ARE NOT ALTERATIONS UNLESS THEY AFFECT THE USABILITY OF THE BUILDING OR FACILITY.

(2) IF EXISTING ELEMENTS, SPACES, OR COMMON AREAS ARE ALTERED, THEN EACH SUCH ALTERED ELEMENT, SPACE, OR AREA SHALL COMPLY WITH THE APPLICABLE PROVISIONS OF APPENDIX A TO THIS PART.

(C) *TO THE MAXIMUM EXTENT FEASIBLE*. THE PHRASE "TO THE MAXIMUM EXTENT FEASIBLE," AS USED IN THIS SECTION, APPLIES TO THE OCCASIONAL CASE WHERE THE NATURE OF AN EXISTING FACILITY MAKES IT VIRTUALLY IMPOSSIBLE TO COMPLY FULLY WITH APPLICABLE ACCESSIBILITY STANDARDS THROUGH A PLANNED ALTERATION. IN THESE CIRCUMSTANCES, THE ALTERATION SHALL PROVIDE THE MAXIMUM PHYSICAL ACCESSIBILITY FEASIBLE. ANY ALTERED FEATURES OF THE FACILITY THAT CAN BE MADE ACCESSIBLE SHALL BE MADE ACCESSIBLE. IF PROVIDING ACCESSIBILITY IN CONFORMANCE WITH THIS SECTION TO INDIVIDUALS WITH CERTAIN DISABILITIES (*E.G.*, THOSE WHO USE WHEELCHAIRS) WOULD NOT BE FEASIBLE, THE FACILITY SHALL BE MADE ACCESSIBLE TO PERSONS WITH OTHER TYPES OF DISABILITIES (*E.G.*, THOSE WHO USE CRUTCHES, THOSE WHO HAVE IMPAIRED VISION OR HEARING, OR THOSE WHO HAVE OTHER IMPAIRMENTS).

SECTION 36.403 - ALTERATIONS: PATH OF TRAVEL

(A) *GENERAL*.

(1) AN ALTERATION THAT AFFECTS OR COULD AFFECT THE USABILITY OF OR ACCESS TO AN AREA OF A FACILITY THAT CONTAINS A PRIMARY FUNCTION SHALL BE MADE SO AS TO ENSURE THAT, TO THE MAXIMUM EXTENT FEASIBLE, THE PATH OF TRAVEL TO THE ALTERED AREA AND THE RESTROOMS, TELEPHONES, AND DRINKING FOUNTAINS SERVING THE ALTERED AREA, ARE READILY ACCESSIBLE TO AND USABLE BY INDIVIDUALS WITH DISABILITIES, INCLUDING INDIVIDUALS WHO USE WHEELCHAIRS, UNLESS THE COST AND SCOPE OF SUCH ALTERATIONS IS DISPROPORTIONATE TO THE COST OF THE OVERALL ALTERATION.

(2) IF A PRIVATE ENTITY HAS CONSTRUCTED OR ALTERED REQUIRED ELEMENTS OF A PATH OF TRAVEL AT A PLACE OF PUBLIC ACCOMMODATION OR COMMERCIAL FACILITY IN ACCORDANCE WITH THE SPECIFICATIONS IN THE 1991 STANDARDS, THE PRIVATE ENTITY IS NOT REQUIRED TO RETROFIT SUCH ELEMENTS TO REFLECT THE INCREMENTAL CHANGES IN THE 2010 STANDARDS SOLELY BECAUSE OF AN ALTERATION TO A PRIMARY FUNCTION AREA SERVED BY THAT PATH OF TRAVEL.

(B) *PRIMARY FUNCTION*. A "PRIMARY FUNCTION" IS A MAJOR ACTIVITY FOR WHICH THE FACILITY IS INTENDED. AREAS THAT CONTAIN A PRIMARY FUNCTION INCLUDE, BUT ARE NOT LIMITED TO, THE CUSTOMER SERVICES LOBBY OF A BANK, THE DINING AREA OF A CAFETERIA, THE MEETING ROOMS IN A CONFERENCE CENTER, AS WELL AS OFFICES AND OTHER WORK AREAS IN WHICH THE ACTIVITIES OF THE PUBLIC ACCOMMODATION OR OTHER PRIVATE ENTITY USING THE FACILITY ARE CARRIED OUT. MECHANICAL ROOMS, BOILER ROOMS, SUPPLY STORAGE ROOMS, EMPLOYEE LOUNGES OR LOCKER ROOMS, JANITORIAL CLOSETS, ENTRANCES, CORRIDORS, AND RESTROOMS ARE NOT AREAS CONTAINING A PRIMARY FUNCTION.

(C) *ALTERATIONS TO AN AREA CONTAINING A PRIMARY FUNCTION*.

(1)ALTERATIONS THAT AFFECT THE USABILITY OF OR ACCESS TO AN AREA CONTAINING A PRIMARY FUNCTION INCLUDE, BUT ARE NOT LIMITED TO -

(i) REMODELING MERCHANDISE DISPLAY AREAS OR EMPLOYEE WORK AREAS IN A DEPARTMENT STORE;

(ii)REPLACING AN INACCESSIBLE FLOOR SURFACE IN THE CUSTOMER SERVICE OR EMPLOYEE WORK AREAS OF A BANK;

(iii) REDESIGNING THE ASSEMBLY LINE AREA OF A FACTORY; OR

(iv)INSTALLING A COMPUTER CENTER IN AN ACCOUNTING FIRM.

(2) FOR THE PURPOSES OF THIS SECTION, ALTERATIONS TO WINDOWS, HARDWARE, CONTROLS, ELECTRICAL OUTLETS, AND SIGNAGE SHALL NOT BE DEEMED TO BE ALTERATIONS THAT AFFECT THE USABILITY OF OR ACCESS TO AN AREA CONTAINING A PRIMARY FUNCTION.

(D) *LANDLORD/TENANT*: IF A TENANT IS MAKING ALTERATIONS AS DEFINED IN § 36.402 THAT WOULD TRIGGER THE REQUIREMENTS OF THIS SECTION, THOSE ALTERATIONS BY THE TENANT IN AREAS THAT ONLY THE TENANT OCCUPIES DO NOT TRIGGER A PATH OF TRAVEL OBLIGATION UPON THE LANDLORD WITH RESPECT TO AREAS OF THE FACILITY UNDER THE LANDLORD'S AUTHORITY, IF THOSE AREAS ARE NOT OTHERWISE BEING ALTERED.

SECTION 36.403(E) *PATH OF TRAVEL*.

(1) A "PATH OF TRAVEL" INCLUDES A CONTINUOUS, UNOBSTRUCTED WAY OF PEDESTRIAN PASSAGE BY MEANS OF WHICH THE ALTERED AREA MAY BE APPROACHED, ENTERED, AND EXITED, AND WHICH CONNECTS THE ALTERED AREA WITH AN EXTERIOR APPROACH (INCLUDING SIDEWALKS, STREETS, AND PARKING AREAS), AN ENTRANCE TO THE FACILITY, AND OTHER PARTS OF THE FACILITY.

(2) AN ACCESSIBLE PATH OF TRAVEL MAY CONSIST OF WALKS AND SIDEWALKS, CURB RAMPS AND OTHER INTERIOR OR EXTERIOR PEDESTRIAN RAMPS; CLEAR FLOOR PATHS THROUGH LOBBIES, CORRIDORS, ROOMS, AND OTHER IMPROVED AREAS; PARKING ACCESS AISLES; ELEVATORS AND LIFTS; OR A COMBINATION OF THESE ELEMENTS.

(3) FOR THE PURPOSES OF THIS PART, THE TERM "PATH OF TRAVEL" ALSO INCLUDES THE RESTROOMS, TELEPHONES, AND DRINKING FOUNTAINS SERVING THE ALTERED AREA.

(F) *DISPROPORTIONALITY*.

(1) ALTERATIONS MADE TO PROVIDE AN ACCESSIBLE PATH OF TRAVEL TO THE ALTERED AREA WILL BE DEEMED DISPROPORTIONATE TO THE OVERALL ALTERATION WHEN THE COST EXCEEDS 20% OF THE COST OF THE ALTERATION TO THE PRIMARY FUNCTION AREA.

(2) COSTS THAT MAY BE COUNTED AS EXPENDITURES REQUIRED TO PROVIDE AN ACCESSIBLE PATH OF TRAVEL MAY INCLUDE:

(i) COSTS ASSOCIATED WITH PROVIDING AN ACCESSIBLE ENTRANCE AND AN ACCESSIBLE ROUTE TO THE ALTERED AREA, FOR EXAMPLE, THE COST OF WIDENING DOORWAYS OR INSTALLING RAMPS;

(ii)COSTS ASSOCIATED WITH MAKING RESTROOMS ACCESSIBLE, SUCH AS INSTALLING GRAB BARS, ENLARGING TOILET STALLS, INSULATING PIPES, OR INSTALLING ACCESSIBLE FAUCET CONTROLS;

(iii) COSTS ASSOCIATED WITH PROVIDING ACCESSIBLE TELEPHONES, SUCH AS RELOCATING THE TELEPHONE TO AN ACCESSIBLE HEIGHT, INSTALLING AMPLIFICATION DEVICES, OR INSTALLING A TEXT TELEPHONE (TTY);

(iv) COSTS ASSOCIATED WITH RELOCATING AN INACCESSIBLE DRINKING FOUNTAIN.

(G) *DUTY TO PROVIDE ACCESSIBLE FEATURES IN THE EVENT OF DISPROPORTIONALITY*.

(1) WHEN THE COST OF ALTERATIONS NECESSARY TO MAKE THE PATH OF TRAVEL TO THE ALTERED AREA FULLY ACCESSIBLE IS DISPROPORTIONATE TO THE COST OF THE OVERALL ALTERATION, THE PATH OF TRAVEL SHALL BE MADE ACCESSIBLE TO THE EXTENT THAT IT CAN BE MADE ACCESSIBLE WITHOUT INCURRING DISPROPORTIONATE COSTS.

(2) IN CHOOSING WHICH ACCESSIBLE ELEMENTS TO PROVIDE, PRIORITY SHOULD BE GIVEN TO THOSE ELEMENTS THAT WILL PROVIDE THE GREATEST ACCESS, IN THE FOLLOWING ORDER:

AN ACCESSIBLE ENTRANCE;

(ii)AN ACCESSIBLE ROUTE TO THE ALTERED AREA;

(iii) AT LEAST ONE ACCESSIBLE RESTROOM FOR EACH SEX OR A SINGLE UNISEX RESTROOM;

(iv) ACCESSIBLE TELEPHONES;

(v)ACCESSIBLE DRINKING FOUNTAINS; AND

(vi) WHEN POSSIBLE, ADDITIONAL ACCESSIBLE ELEMENTS SUCH AS PARKING, STORAGE, AND ALARMS.

(H) *SERIES OF SMALLER ALTERATIONS*

(1) THE OBLIGATION TO PROVIDE AN ACCESSIBLE PATH OF TRAVEL MAY NOT BE EVADED BY PERFORMING A SERIES OF SMALL ALTERATIONS TO THE AREA SERVED BY A SINGLE PATH OF TRAVEL IF THOSE ALTERATIONS COULD HAVE BEEN PERFORMED AS A SINGLE UNDERTAKING.

(2)

(I) IF AN AREA CONTAINING A PRIMARY FUNCTION HAS BEEN ALTERED WITHOUT PROVIDING AN ACCESSIBLE PATH OF TRAVEL TO THAT AREA, AND SUBSEQUENT ALTERATIONS OF THAT AREA, OR A DIFFERENT AREA ON THE SAME PATH OF TRAVEL, ARE UNDERTAKEN WITHIN THREE YEARS OF THE ORIGINAL ALTERATION, THE TOTAL COST OF ALTERATIONS TO THE PRIMARY FUNCTION AREAS ON THAT PATH OF TRAVEL DURING THE PRECEDING THREE YEAR PERIOD SHALL BE CONSIDERED IN DETERMINING WHETHER THE COST OF MAKING THAT PATH OF TRAVEL ACCESSIBLE IS DISPROPORTIONATE.

(II) ONLY ALTERATIONS UNDERTAKEN AFTER JANUARY 26, 1992, SHALL BE CONSIDERED IN DETERMINING IF THE COST OF PROVIDING AN ACCESSIBLE PATH OF TRAVEL IS DISPROPORTIONATE TO THE OVERALL COST OF THE ALTERATIONS.

COORDINATE WITH REQUIREMENTS OF THE BUILDING CODE, COMPLY WITH ALL APPLICABLE PROVISIONS OF BOTH.

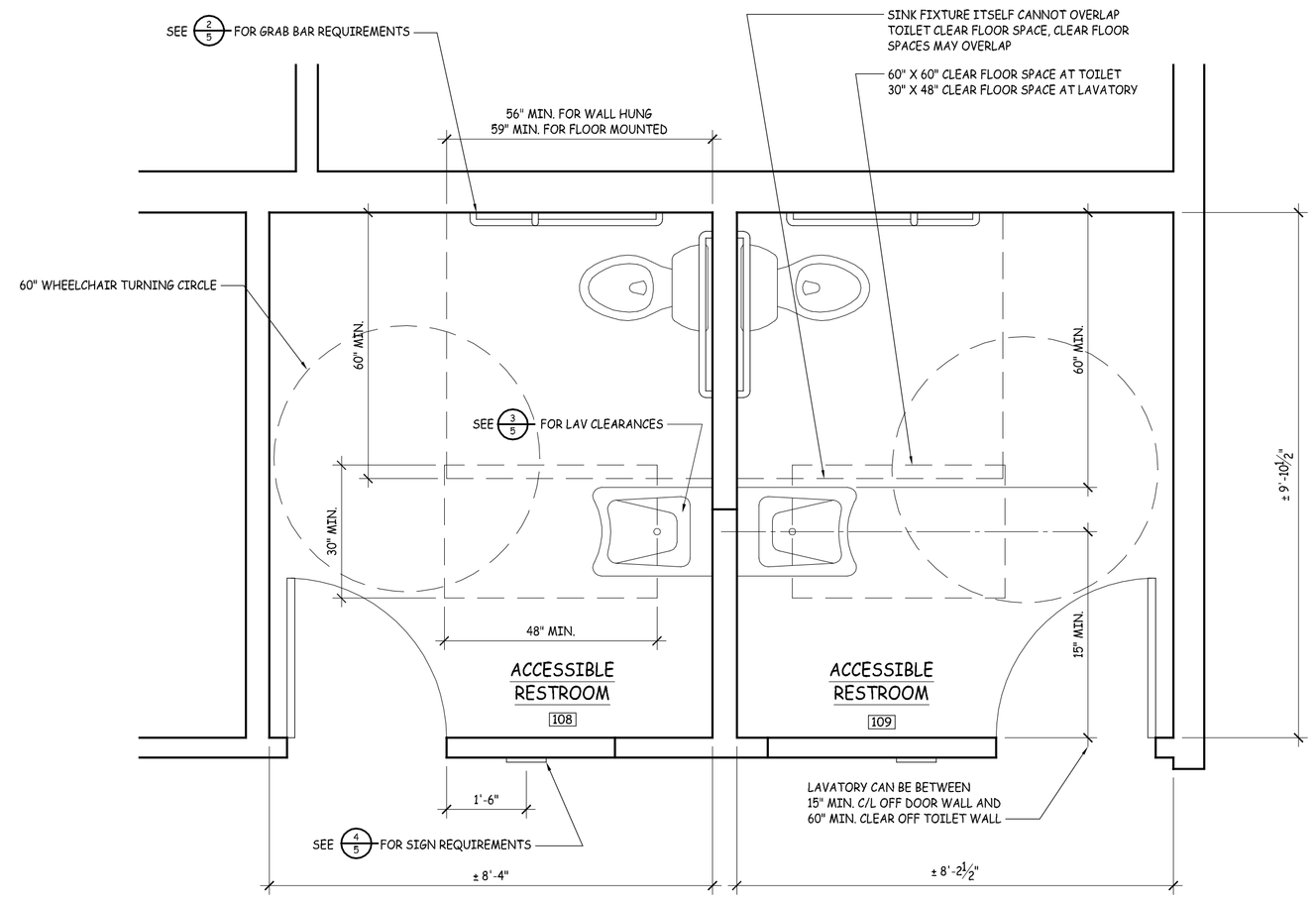

1/5 ACCESSIBLE RESTROOM PLANS 1/2" = 1'-0"

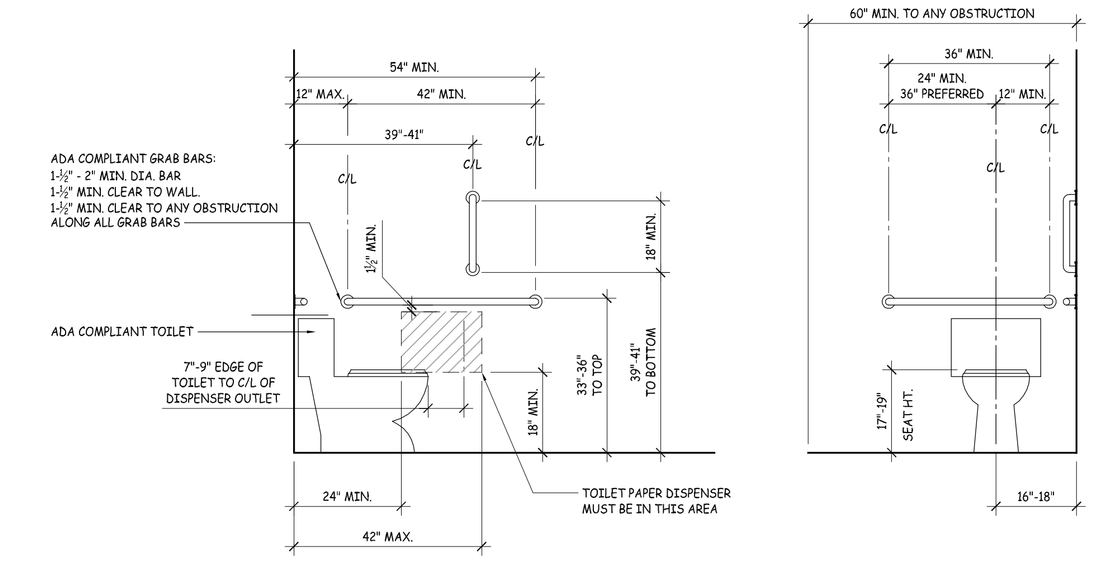

2/5 TOILET GRAB BARS & CLEARANCES 1/2" = 1'-0"

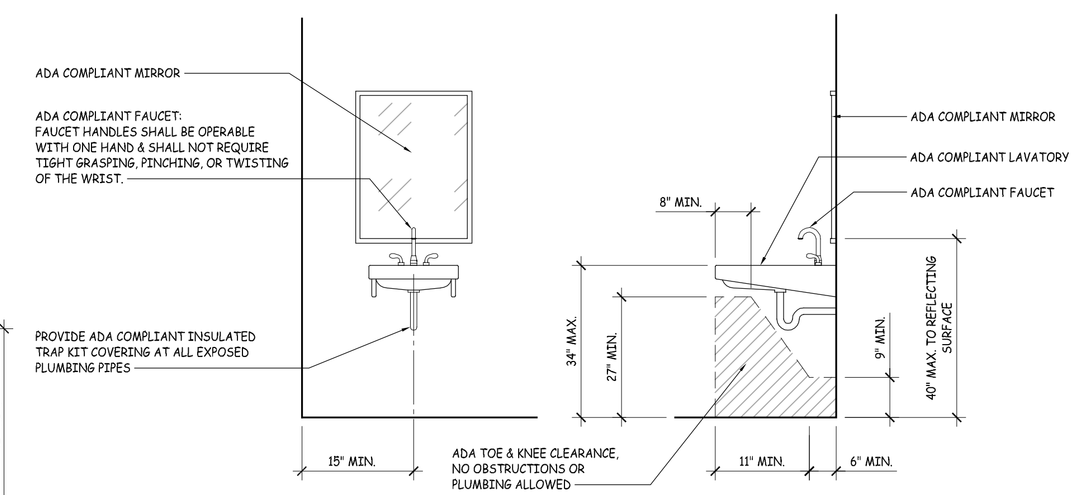

3/5 LAVATORY CLEARANCES 1/2" = 1'-0"

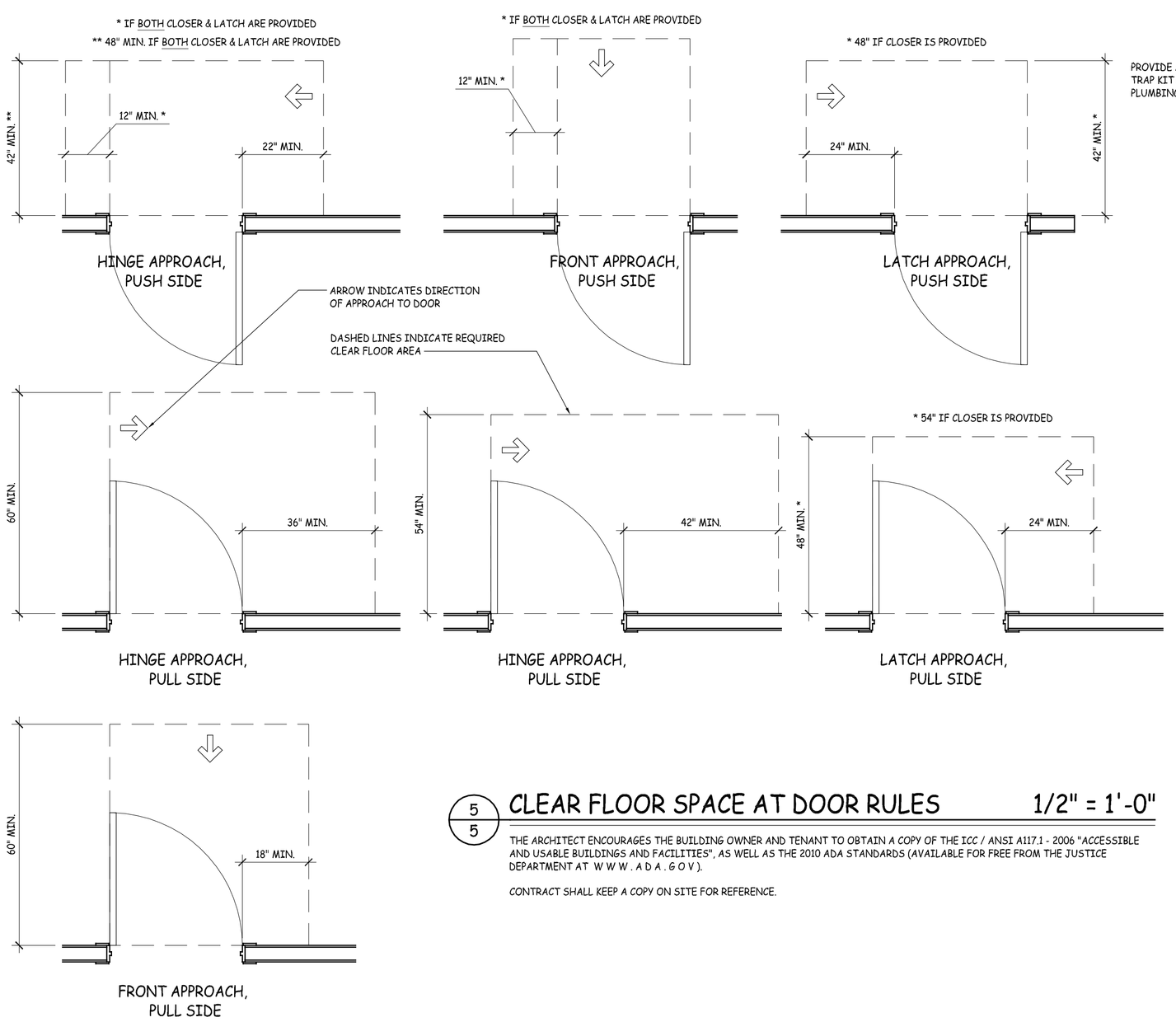

5/5 CLEAR FLOOR SPACE AT DOOR RULES 1/2" = 1'-0"

THE ARCHITECT ENCOURAGES THE BUILDING OWNER AND TENANT TO OBTAIN A COPY OF THE ICC / ANSI A117.1 - 2006 "ACCESSIBLE AND USABLE BUILDINGS AND FACILITIES", AS WELL AS THE 2010 ADA STANDARDS (AVAILABLE FOR FREE FROM THE JUSTICE DEPARTMENT AT W W W . A D A . G O V).

CONTRACT SHALL KEEP A COPY ON SITE FOR REFERENCE.

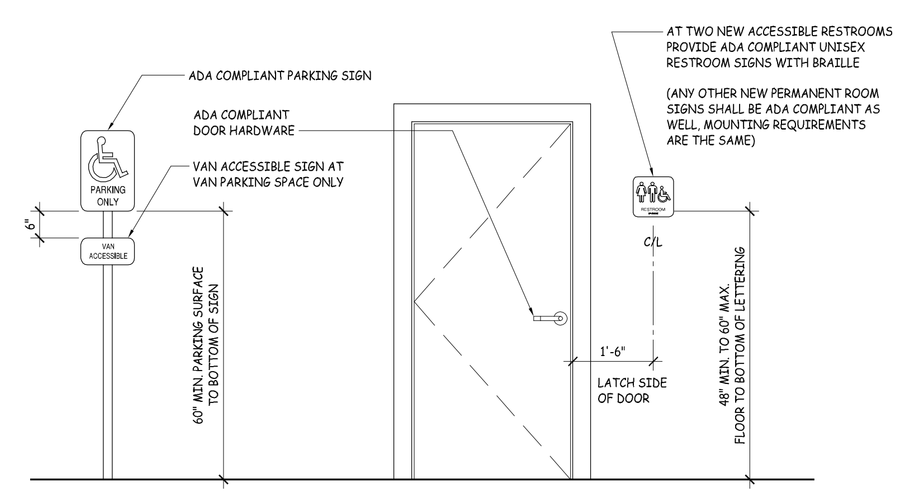

4/5 SIGNS 1/2" = 1'-0"

REV. #	REVISION DESCRIPTION	DATE
	PROJECT START-UP BUILDING VERIFICATION	7/30/2013
	PER OWNER / TENANT / CONTRACTOR / ARCHITECT MT6	8/13/2013
	PER OWNER / TENANT / CONTRACTOR / ARCHITECT MT6	8/26/2013
	FOR CONSTRUCTION	9/5/2013

VALID FOR PERMITS ONLY IF IMPRESSED WITH ORIGINAL SEAL AND ORIGINAL SIGNATURE IN "RED"

Eric C. Van Reed, Architect
PA Reg 042000115 - NJ Reg 21AI00000100
Creative Design Assoicates, Inc.
ARCHITECTURE INTERIORS SITE & SPACE PLANNING
350 Callowhill Road
Chalfont, PA 18914
215-872-1155
www.ArchitectVision.com

Gene Bauerle, G.C.
PA Contractor #063355
E. R. B. & Sons, Inc.
GENERAL CONTRACTING
1117 Eagle Road
Huntingdon Valley, PA 19006
267-228-7451
erbj@comcast.net

ACCESSIBLE RESTROOMS

MIDDLETOWN PROFESSIONAL PLAZA
1400 VETERANS HIGHWAY
LEVITTOWN, PA 19047
MIDDLETOWN TWP., BUCKS CO., PENNA.
TENANT FIT-OUT FOR: SIR FOUNDATION

Sheet No.
5
of 5

Comm. No.
13 - 2982